THINQ

THINQ DALI CEILING MOUNTED AC PIR SENSOR WITH 10A RELAY

IL-TSDALISAW WITH WIELAND GST18I3

Features.

- Mesh network, which has a much longer control distance, transmits received signals to neighboring devices.
- All devices on DALI line are broadcast controlled by mobile application.
- Supports our kinetic energy switches EWSDB.
- Autonomos sensor-based control
- Mesh Range over 40m at open area
- Supports sensitivity adjustment, Mesh Network, abetter method to deal with false trigger
- Recessed mounted/ Surfaced-mounted application• On-board antenna
- IP44, recommend indoor application
- 5 years warranty

1- Average Input Current:	< 30mA
2- Standby-power consumption:	< 0.5W
3- Power Consumption:	<1W
4- Max Tx Power:	+8dBm
5- Number of connected drivers:	Up to 64 contol gears (Broadcast control)
6- Status Indicator:	Red-Movement detection; Green-Network status
7- Detection range:	ϕ10m@3m Height @ Default sensitivity
Detection Angle:	127°
Operating Range (Light sensor):	1-1000Lx
Light Sensor Accuracy:	±20%
8- Built-in type:	IP44(Front-Face), Class III, ta 45°C, tc 55°C
9- Operating temperature:	-20°C-50°C
Storage temperature:	-25°C-60°C
Operating humidity:	0-80%(non-condensing)
10- Expected Lifetime:	More than 5 years.

ENERGY SAVINGS

- Low/High-end trimming
- Daylight harvesting
- Occupancy/Vacancy detection
- Auto and advanced demand response programs

COMFORT & CONVENIENCE

Advanced occupancy detections

- Light-level stability
- Configurable dim-and-linger occupancy
- Personalized setting profile
- Work with kinetic switch keypad and dimmer wallstation
- Multi-scenes control

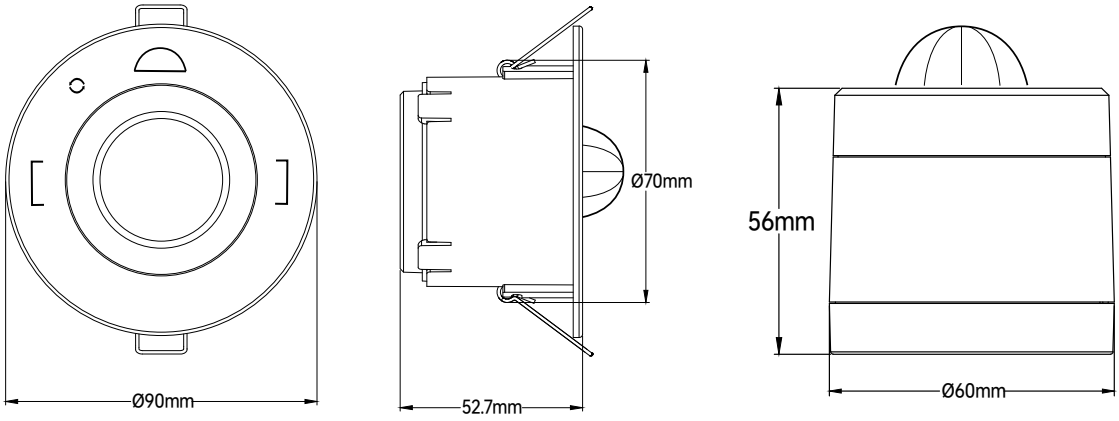

Input & Output Characteristics	
Operating voltage	220 ~240VAC 50/60Hz
Stand-by power	<0.5W
Relay	Max.10A, 400W LED

Environment Parameters	
Operation temperature	Ta: -20 °C ~ +50 °C
IP rating	IP44(Front-face)
	IP44 (With surface mount kit)

Safety & EMC	
EMC standard (EMC)	EN55015, EN61000, EN61547
Safety standard (LVD)	EN60669-1, EN60669-2-1 AS/NZS60669-1/-2-1
RED	EN300328, EN301489-1/-17
Certication	ENEC, CE , EMC, RED, RCM

Mechanical data	
Dimension	ϕ90*52mm(without surface kit)
Material	Flame-retardant/ABS
Protection Class	Class II

Sensing	
Movement detection	Typical.10m @ 3m height
Installation	Max.6m

Connectors	
Terminal block/Wire size	0.5mm² - 1.5mm² solid or stranded
Wire strip length	6-7mm

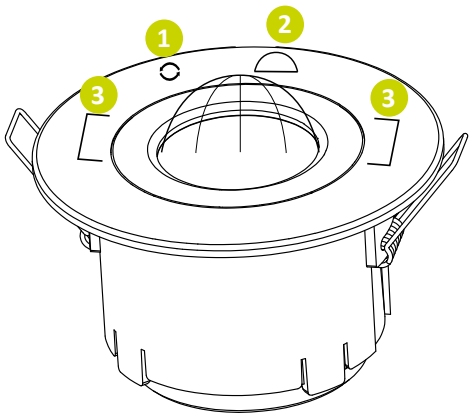

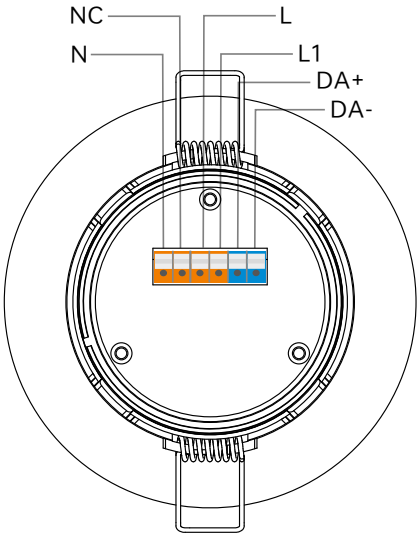

1 Magnetic reset. Using magnet close this icon over 5s. Reset successfully, LED quick flash.
2 Semi-circular detection pattern icon
3 [ ] Corridor detection pattern

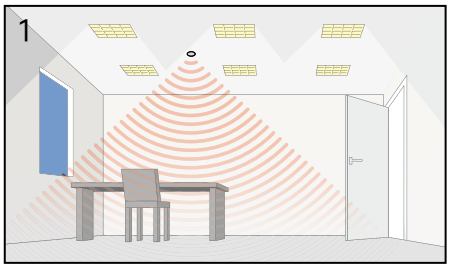

1. Power up the sensor. The load should come on immediately.

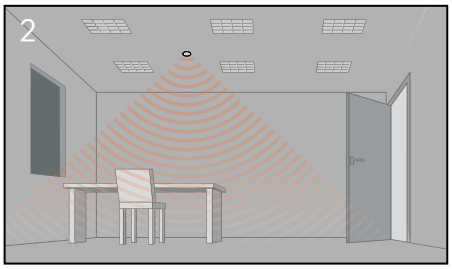

2. Vacate the room or remain very still and wait for the load to switch off .

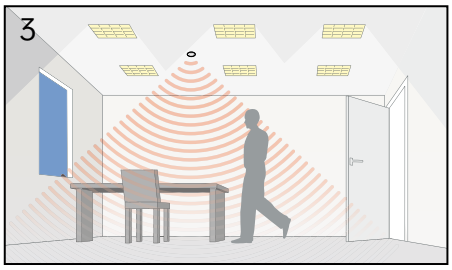

3. Enter the room or make some movement and check that the load switches on.

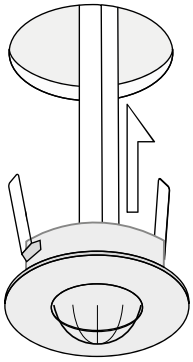

Bend the springs up and push detector through hole in ceiling. When fully inserted the springs snap back to hold the device in place.To avoid injury, take care when bending springs.

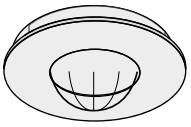

Installation complete.

PRECAUTIONS

- Do not place the SENSOR near heatsources, fans or in ventilated ceiling voids.
- Do not place close to, or positioned such that, any light source points directly into the SENSOR.
- Ensure wires and cables are securely held within the connection terminals.
- Disconnect the SENSOR from the circuit before performing insulation testing of the wiring circuit.

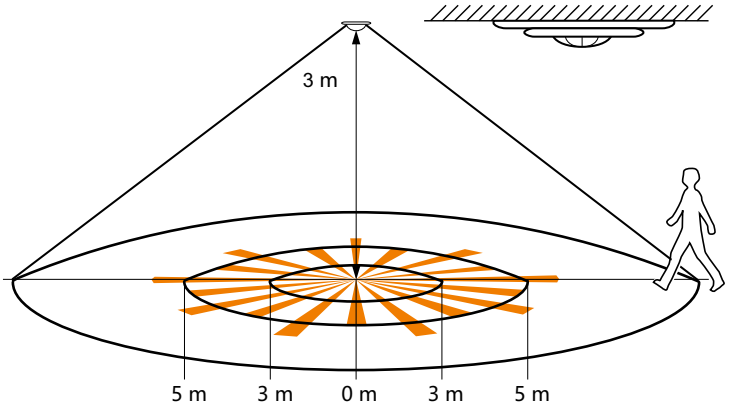

Coverage Side View

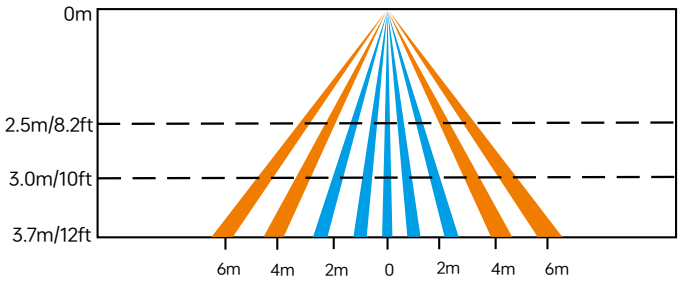

Coverage Top View

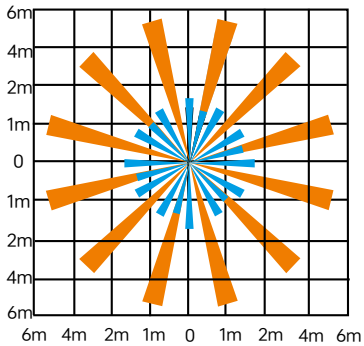

The detection area for movement can be roughly divided into two parts:

Slow movement (person moving < 1.0'/s or 0.3m/s)

Quick movement (person moving > 1.3'/s or 0.4m/s)

DETECTION RANGE

Note:

1) Following different detection areas are based on different installation heights & patterns.
2) Detection Pattern is a relevant value, the performance should depends on the site conditions (installation height/ temperature/ sunlight/humidity/ Blind area...etc)

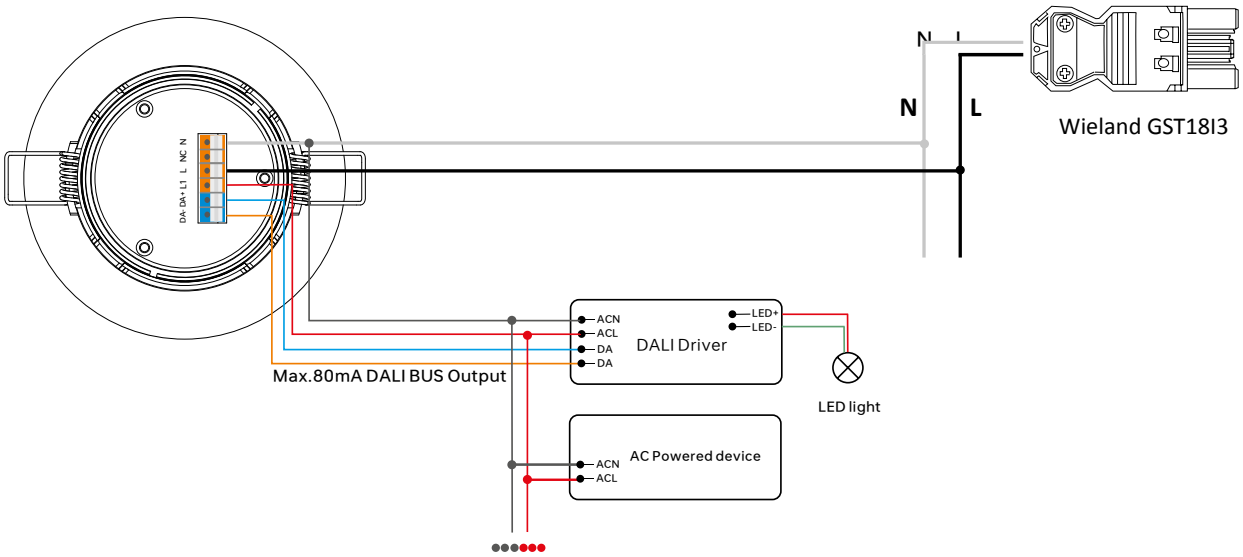
N
L
N
L
Wieland GST18I3
DA- DA+ L1 L NC N
ACN
ACL
DA
DA
DALI Driver
LED+
LED-
LED light
Max.80mA DALI BUS Output
ACN
ACL
AC Powered device

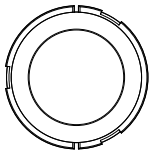

No-Block Lens Mask
(Default)

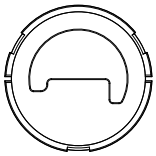

Semi-Circular Lens Mask
(Doors)

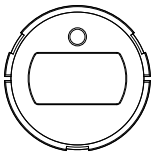

Corridor Lens Mask

1) **No-Block** Lens Mask

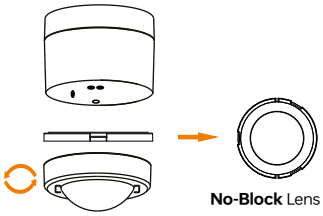

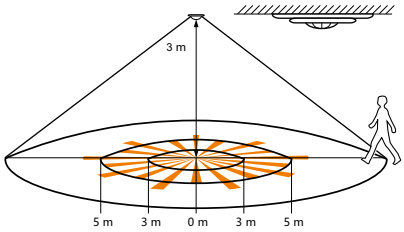

With No-Block Lens Mask: ϕ8-10m at 3m height

1. Turn the sensor cover counterclockwise and put the **No-Block Lens Mask** in.
   (Default setting)

2) **Semi-Circular** Lens Mask

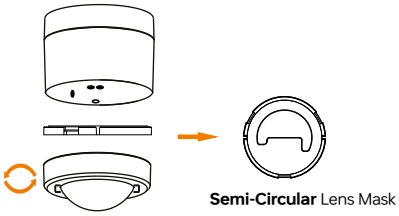

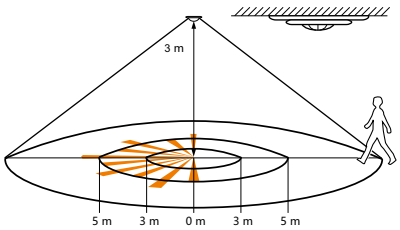

With Semi-Circular Lens Mask: Half-detection pattern

1. Turn the sensor cover counterclockwise and put the **Semi-Circular Lens Mask** in.
   (Doors)

3) **Corridor** Lens Mask

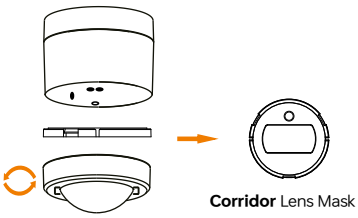

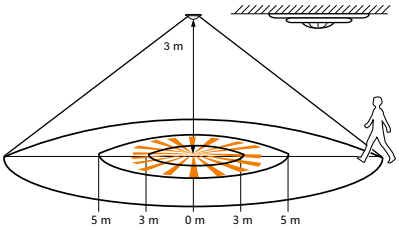

With Corridor Lens Mask: ϕ6-7m at 3m height

1. Turn the sensor cover counterclockwise and put the **Corridor Lens Mask** in.

INTERLIGHTLED.COM